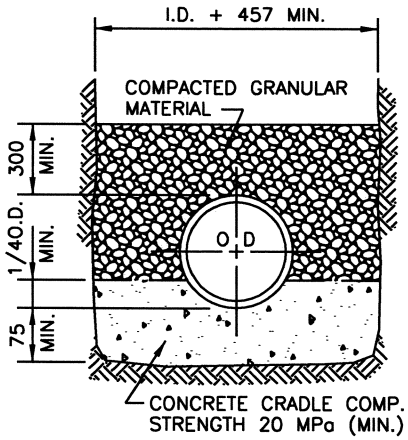

CLASS "A"

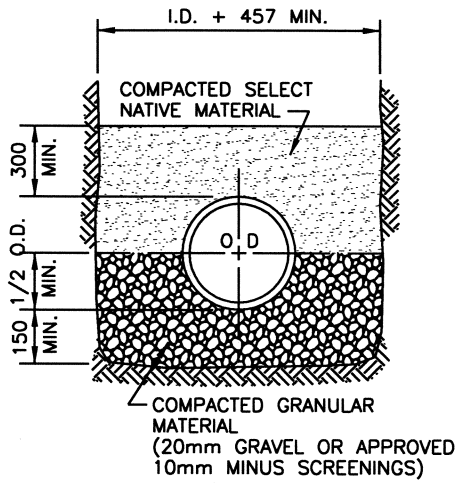

CLASS "B"

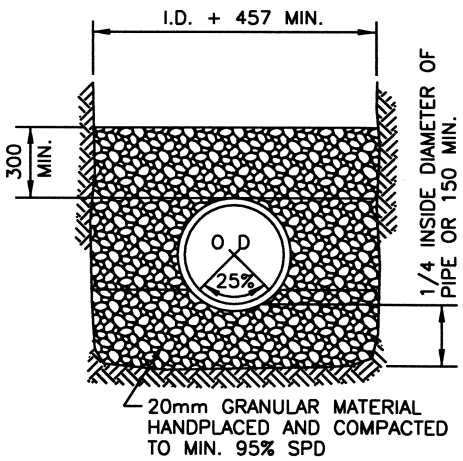

CLASS "B1"

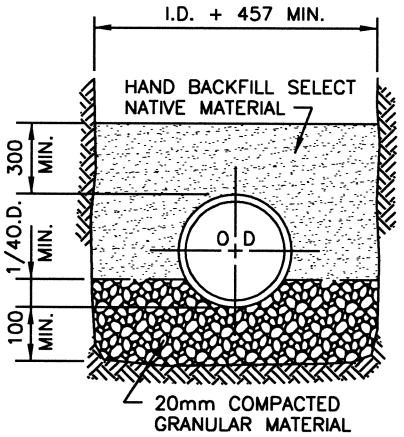

CLASS "C"

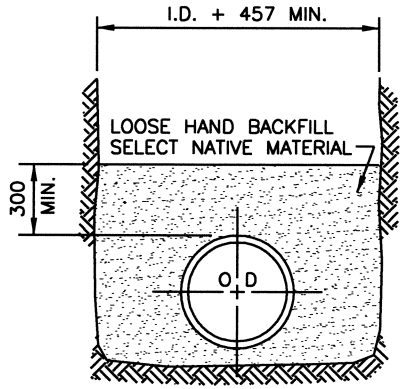

CLASS "D"

NOTE:

- SAND WILL BE ALLOWED ON PIPE SIZES UP TO AND INCLUDING 375mm ø PROVIDING THE PIPE HAS WATER TIGHT JOINTS EXCEPT AS NOTED OTHERWISE.
- 20mm GRANULAR MATERIAL TO BE CRUSHED GRAVEL UNLESS STIPULATED AS WASHED ROCK OR OTHERWISE.
- CLASS "B1" APPLIES TO CSP PIPE USE OR IN HIGH WATER TABLE CONDITIONS.

REVISIONS

Date	Details
98-06-18	DESIGN STANDARD UPDATE

Town of Whitecourt

PIPE BEDDING DETAILS

APPROVED:

SCALE: N.T.S.

DATE: JANUARY, 1996

STD. DWG. No. 5-01

ACH 98-06-22 5-01.DWG